AI-Driven Temperature Prediction and Cell Balancing in Lithium-ion Batteries

Mohammad Ahmed M. Y. Ansari
Computer Science and Engineering (Data Science)
VCET,
Mumbai, India
ahmed.223996101@vcet.edu.in

Prathamesh Liladhar Patil
Computer Science and Engineering (Data Science)
VCET,
Mumbai, India
prathamesh.224446105@vcet.edu.in

Sagar Yashwant Ghat
Computer Science and Engineering (Data Science)
VCET,
Mumbai, India
sagar.224126105@vcet.edu.in

Vikas Gupta
Computer Science and Engineering (Data Science)
VCET,
Mumbai, India
vikas.gupta@vcet.edu.in

Shilpa Venkatesh Bane
Computer Science and Engineering (Data Science)
VCET,
Mumbai, India
shilpa.bane@vcet.edu.in

***Abstract*—Lithium-ion batteries are the most reliable energy storage source for modern systems including Electric Vehicles, Consumer Electronics, and Grid-scale Storage. Although these batteries provide high energy density and long cycle life, pack safety and performance are compromised by inter-cell electrical mismatch and irregular core temperature variations, which can accelerate aging and trigger hazardous outcomes including thermal runaway. To address these limitations beyond traditional rule-based BMS logic, this study presents a fully AI-driven battery management framework integrating both temperature prediction and intelligent real-time cell balancing. The system implements a Random Forest Regression model to estimate internal cell temperature using voltage, current, state-of-charge (SoC), cycle count, capacity indicator, and internal resistance. Real-time inference and safety classification are deployed through a responsive interface developed in React.js, enabling user-level diagnostics and control. Experimental outcomes confirm that the proposed system enhances pack-level efficiency, reduces thermal and SoC heterogeneity, and strengthens operational safety without requiring GPU acceleration. This complete integration of AI-enabled thermal prediction and active cell balancing proves the feasibility of deploying smarter, predictive, and self-correcting next-generation Battery Management Systems for long-term sustainable battery operation.**

Keywords—Lithium-Ion Battery Packs, Battery Management System, AI-Driven Cell Balancing, Temperature Core Estimation, Random Forest Regressor, Thermal Safety Classification, Real-Time Monitoring Interface, CPU-Efficient BMS Intelligence, Machine Learning for Battery Safety, Electric Vehicles, Renewable Storage, Consumer Devices.

I. Introduction

Lithium-ion batteries have become the leading energy storage technology in electric vehicles, portable electronics, and renewable-energy systems due to their high energy density, long cycle life, and favorable efficiency characteristics [1], [3]. Their performance critically influences vehicle range, charging capability, thermal safety, and overall reliability. Despite these advantages, lithium-ion batteries experience challenges such as temperature fluctuations, non-uniform cell aging, and imbalance in state of charge (SoC), which significantly affect longevity and safety [2], [11]. Temperature rise and thermal gradients are especially harmful, as they accelerate degradation and may lead to conditions such as thermal runaway [12].

Accurate temperature prediction and thermal modeling are essential for safe battery operation. Numerous studies have analyzed core temperature estimation, internal thermal behavior, and measurement techniques ranging from impedance-based sensing to sensorless estimation methods [4], [5], [7], [9]. Traditional Battery Management Systems (BMS) typically rely on fixed-rule algorithms and hardware balancing circuits; however, these approaches often fail to address nonlinear behavior under dynamic load and high-current EV conditions [3], [8]. Recent research highlights the limitations of conventional thermal management and the need for advanced sensing, multi-dimensional diagnostics, and predictive capabilities in next-generation systems [10], [11].

Artificial Intelligence (AI) has emerged as a highly effective approach for improving temperature prediction, fault diagnosis, and state estimation in lithium-ion batteries. Deep-learning techniques have demonstrated significant accuracy improvements in predicting the battery health state, capacity fade, and thermal behavior compared to classical estimation methods [13], [14]. Machine-learning models have also been applied to estimate Remaining Useful Life (RUL), enabling predictive and preventative maintenance strategies [15], [16].

For SoH monitoring, neural-network-based models and sequence-learning architectures have shown superior results in learning degradation patterns across diverse operating conditions [17].

In parallel, intelligent cell balancing strategies have gained attention as a means to improve safety, efficiency, and usable capacity. Active balancing techniques combined with machine learning approaches enable dynamic reallocation of charge across cells, thereby reducing stress and enhancing lifetime [18], [19]. Studies have demonstrated that effective balancing can significantly extend battery life and improve EV performance [19], [20]. Furthermore, comprehensive reviews of balancing architectures provide insight into switched-capacitor, transformer-based, and AI-driven balancing systems suitable for modern BMS design [20].

This project proposes an AI-driven intelligent framework that integrates temperature prediction with adaptive cell balancing for real-time operation of lithium-ion battery packs. By leveraging multi-sensor data and deep-learning-based thermal forecasting, the system aims to predict temperature rise before it becomes hazardous. In addition, reinforcement-learning-based balancing algorithms are incorporated to maintain uniform charge distribution across cells under varying load conditions. The combined predictive–adaptive strategy is expected to increase safety margins, slow degradation, and extend overall battery life. The proposed system aligns with recent advancements in smart battery management and offers scalability for electric vehicles and energy-storage systems [13]–[20].

II. Problem Statement and Objectives

A. Problem Statement

In our context, Lithium-ion batteries continue to face critical challenges related to cell imbalance and abnormal temperature rise, where uneven charge distribution reduces usable capacity and localized heating accelerates aging while increasing the likelihood of thermal runaway [2], [11], [12]. Conventional Battery Management Systems (BMS) primarily employ static, rule-based strategies such as passive balancing and reactive thermal control, which exhibit limited adaptability under dynamic operating conditions including fast charging, fluctuating load profiles, and extreme ambient environments [3], [8]. Although physics-based electro-thermal models offer high prediction accuracy, they are computationally demanding and unsuitable for real-time deployment in electric vehicles and large-scale energy-storage systems [4], [10]. In parallel, existing AI-based approaches have shown promise in temperature estimation, SoH prediction, and RUL forecasting, but most techniques remain constrained to offline analysis and lack integration with real-time balancing actions [13]–[17]. Consequently, there is a pressing need for an intelligent and unified framework that combines AI-driven temperature prediction with adaptive cell balancing to enhance safety, operational efficiency, and long-term reliability of lithium-ion batteries in practical large-scale applications [18]–[20].

B. Objectives

The findings from the implementation of the systems has significant relevance to the research objectives and address the identified problems.

1. To develop an AI-driven system capable of predicting internal temperature variations in lithium-ion batteries in real time.
2. To implement adaptive cell balancing strategies that maintain uniform charge distribution and improve battery health.
3. To integrate predictive thermal models with balancing algorithms for proactive management under dynamic load conditions.
4. To enhance the safety, efficiency, and lifespan of lithium-ion batteries compared to conventional BMS approaches.
5. To design the framework for scalability and practical deployment in electric vehicles and large-scale energy storage systems.
6. To validate the effectiveness of the proposed system through simulations and experimental analysis.

III. Literature survey

A. Literature Review

Lithium-ion batteries have been extensively researched due to their vital role in electric vehicles, renewable energy storage, and portable electronic devices [1], [3]. These batteries offer advantages such as high energy density, long cycle life, and low self-discharge rates, making them the preferred choice for modern energy storage applications. However, challenges such as non-uniform cell aging, state-of-charge (SoC) imbalance, and thermal instability significantly affect battery performance, lifespan, and safety. Localized heating or temperature gradients can accelerate degradation and, in extreme cases, induce hazardous conditions including thermal runaway, which may lead to swelling, venting, fire, or explosion [2], [11], [12].

Effective battery management thus requires accurate temperature monitoring and intelligent charge distribution strategies. Temperature rise in lithium-ion batteries is primarily caused by three mechanisms: ohmic (Joule) heating during charge and discharge cycles, electrochemical reaction heat from side reactions or enthalpy changes, and polarization losses associated with charge transfer and ion diffusion. Improper dissipation of this heat results in internal thermal gradients, reducing capacity and creating an imbalance among cells [12].

Various temperature measurement approaches have been proposed to monitor battery operation. Contact methods, such as thermocouples, thermistors, or resistance temperature detectors (RTDs), provide accurate real-time measurements but are intrusive, may compromise battery sealing, and cannot directly measure internal core temperature [4], [5]. Non-contact or model-based approaches, including computational simulations and impedance-based estimations, offer safer alternatives but often exhibit reduced accuracy under dynamic load conditions typical in electric vehicles [7], [9]. Consequently, direct measurement alone is insufficient, particularly during rapid charging or high-load scenarios.

Temperature prediction techniques have evolved to address the limitations of conventional measurement. Electrochemical models solve partial differential equations capturing ion transport, electrochemical reactions, and thermal behavior, offering high accuracy but with significant computational overhead, making them unsuitable for real-time BMS [3]. Equivalent circuit models (ECM) simplify battery dynamics into resistors, capacitors, and voltage sources, providing lightweight solutions but reduced precision under varying load and temperature conditions [3], [8]. Electrochemical impedance spectroscopy (EIS) uses frequency-dependent impedance to infer temperature and state-of-health (SoH), providing rich data but requiring specialized equipment and complex measurement setups [4]–[7]. Data-driven approaches, including machine learning algorithms such as regression, support vector machines (SVM), random forest, and deep learning models like LSTM or CNN, have shown significant potential for real-time temperature prediction and SoH estimation, capturing non-linear hidden patterns from sensor data (voltage, current, SoC) but requiring large datasets and high computational power [13]–[17]. Hybrid methods that combine physical models with AI aim to balance accuracy and computational efficiency by using outputs from ECM or physics-based models as inputs to neural networks; however, they introduce additional complexity for deployment in embedded BMS [13], [14].

Cell balancing techniques are equally critical to ensure uniform charge distribution and extend battery life. Passive balancing dissipates excess charge as heat through resistors, which is simple and low-cost but wastes energy and increases thermal load, making it unsuitable for high-capacity battery packs [18]. Active balancing transfers charge from higher SoC cells to lower ones using inductors, capacitors, or transformers, offering improved efficiency and performance, though at the cost of increased circuit complexity and expense [18], [19]. Emerging AI-driven balancing strategies employ machine learning and reinforcement learning to predict imbalance trends and dynamically redistribute charge, enhancing efficiency and prolonging battery life. Despite promising results, such approaches are still in experimental stages and are not yet widely adopted in commercial BMS [14], [20].

In summary, existing systems demonstrate a trade-off between accuracy, efficiency, and feasibility. Electrochemical and ECM models provide foundational insights but are limited by either computational demand or reduced precision. EIS-based methods offer rich internal information but are complex for real-time deployment. Data-driven and hybrid AI approaches present the most practical path forward, combining predictive thermal modeling with intelligent balancing strategies, and forming the basis for the proposed AI-driven framework in this work.

TABLE I: AUTHOR, TECHNIQUE, MERITS AND LIMITATIONS OF RESEARCH PAPERS

Author	Technique	Merits	Limitation
Bao et al. [1]	Temperature prediction review.	Comprehensive survey of methods; highlights key challenges.	Limited to literature review; no experimental validation.
Surya et al. [2]	Core and surface temperature estimation.	Accurate estimation for BMS; multi-sensor approach.	Requires calibration; computational complexity.
Srinivasan et al. [4]	Online EIS measurement	Predicts battery temperature from phase deviation.	Limited accuracy; applicable for 0–25°C.
Xiang et al. [6]	PWM switching oscillation for temperature monitoring.	Real-time monitoring; non-intrusive.	Sensor precision may vary; limited validation.
Al-Meer [13]	LUT-memory deep learning for health prediction.	High accuracy; AI-driven approach.	Offline predictions; needs dataset training.
Sultan et al. [15]	Active balancing + ML for RUL estimation.	Improves lifespan; predictive balancing.	Hardware integration complexity; computational load.
Koseoglou et al. [18]	Highly effective cell equalization.	Maintains SoC uniformity; reduces stress on cells.	Focus on small battery packs; scalability issues.
Stuart et al. [19]	Fast equalization for large Li-ion batteries.	Faster balancing; improves energy efficiency.	High-cost circuits; implementation complexity.

B. Limitations of Existing System

Despite significant advancements in lithium-ion battery management, existing systems exhibit several limitations that constrain performance, efficiency, and safety. Traditional physics-based models, such as electrochemical simulations, provide high accuracy in predicting internal temperatures and state-of-charge (SoC) variations [3]. However, their high computational cost and reliance on extensive parameterization make them unsuitable for real-time implementation in embedded battery management systems, particularly in electric vehicles with dynamic load profiles [3]. Equivalent circuit models (ECM) offer computational efficiency and are widely used in practice, but their simplified representation often reduces accuracy under varying operational conditions and temperature fluctuations [3], [8].

Electrochemical impedance spectroscopy (EIS) and other sensor-based approaches improve insight into internal battery behavior [4]–[7]. Nevertheless, they require specialized instrumentation, and their practical implementation for continuous, onboard monitoring is limited. Non-contact or sensorless estimation methods partially address these challenges but suffer from reduced precision in real-world dynamic scenarios, such as rapid charging, high current draws, and varying ambient temperatures [7], [8].

In terms of cell balancing, passive techniques are simple and low-cost but inefficient, as excess energy is dissipated as heat, contributing further to thermal load and limiting applicability for high-capacity battery packs [18]. Active balancing strategies improve energy utilization and extend battery life by redistributing charge among cells [18], [19]; however, they involve complex circuitry and higher costs, which can hinder large-scale deployment. Emerging AI-enabled balancing approaches, including machine learning and reinforcement learning algorithms, offer predictive and adaptive capabilities, but these methods are still largely experimental and require substantial datasets, high computational power, and careful calibration for real-world conditions [14], [20].

TABLE II: FUTURE WORK OF RESEARCH PAPERS.

Author	Future Work
Al-Meer [13]	Real-time AI-based temperature prediction for early overheating detection.
Sultan et al. [15]	Adaptive intelligent cell balancing to reduce SoC imbalance.
Sultan et al. [15]	Non-intrusive temperature monitoring integrated with multi-sensor data.
Shirkhani et al. [4]	Investigate the use of hybrid AI models for trend resurgence prediction.
Koseoglou et al. [18]	Fast active cell equalization adapted for real-time operation.

IV. Proposed system

A. Introduction

The proposed system is an AI-driven battery management framework designed to improve the safety, efficiency, and lifespan of lithium-ion battery packs. It focuses on four core objectives:

- Real-Time Monitoring: Track voltage, current, State-of-Charge (SoC), State-of-Health (SoH), and temperature of each cell.
- AI-Based Temperature Prediction: Forecast short-term temperature changes to prevent overheating and thermal runaway.
- Intelligent Cell Balancing: Use adaptive strategies to minimize charge imbalance and enhance battery performance.
- Anomaly Detection and Safety: Identify abnormal cell behavior and trigger alerts or fail-safe actions such as shutdown or current reduction.

The system combines sensor data with predictive modeling and adaptive control. Optional cloud integration provides long-term data storage, advanced analytics, and fleet-level learning, while a user dashboard offers real-time visualization of battery status, temperature predictions, and balancing activity. This integrated approach delivers a scalable, efficient, and safe solution for electric vehicles, portable electronics, and large-scale energy storage systems.

B. System Architecture

The proposed system architecture, illustrated in Fig. no. 1, implements a real-time lithium-ion battery temperature prediction and monitoring framework organized into four functional layers:

1. Hardware Layer: Comprises the lithium-ion battery pack monitored by multivariate sensors measuring voltage (V), current (A), surface temperature (°C), and state-of-charge (SoC). A microcontroller unit (MCU) performs data acquisition, dispatching real-time values to the backend server while simultaneously logging historical data to a CSV dataset for offline model development.
2. Data & ML Training Layer (Offline): Utilizing the logged tabular dataset, this layer handles data cleaning and engineers a seven-dimensional feature vector $X = [V, I, SoC, C, R_{int}, cycle, t]$. Features are normalized using StandardScaler prior to training a Random Forest regression model (an ensemble of N=50 decision trees) for temperature prediction. The final optimized model and scaler objects are serialized for deployment.
3. Control & Safety Layer (Backend Deployment): A Flask-based REST API server hosts the pre-trained model. The /predict endpoint receives live sensor data packets, applies real-time scaling and inference to generate predicted temperature (T_{pred}), and executes a threshold-based safety mechanism, assigning a WARNING status if $T_{pred} > 36$ °C.
4. User & Visualization Layer (Frontend Dashboard): A React-based web interface acts as the API client, polling the backend for real-time insights. It provides interactive visualization of actual versus predicted thermal behavior, displays instantaneous safety status cards, and issues alerts to the operator.

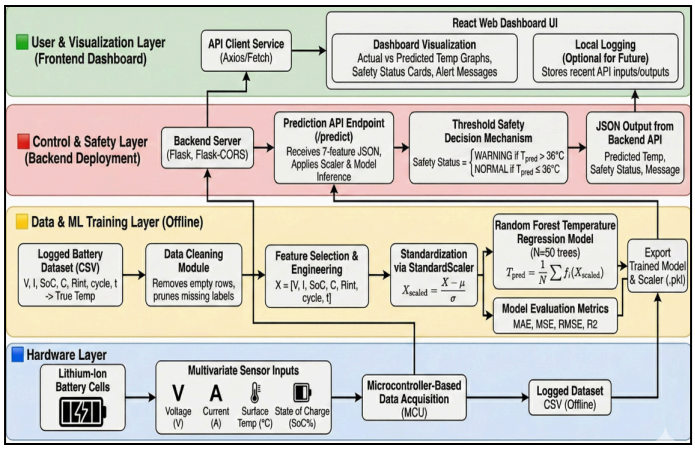

Fig. no. 1 Proposed System Architecture

C. Mathematical Model and Implemented Results

1. Mathematical model: Battery core temperature depends on heat generation and heat dissipation. The thermal behavior is expressed by:

$$\frac{dT}{dt} = \frac{\left(Q_{ohmic} + Q_{reaction} - h*A*\left(T - T_{amb}\right)\right)}{\left(m*c_p\right)}$$

Where:

h = heat transfer coefficient
A = surface area
T_{amb} = ambient temperature
m = mass
c_p = specific heat
This equation enables continuous estimation of temperature rise under dynamic current loads.

2. State-of-Charge (SoC) Estimation: The system estimates SoC using the well-established Coulomb Counting technique:

$$SoC(t) = SoC(0) + \left(\frac{1}{Cn}\right) * \int_0^t I(\tau)d\tau$$

Where:

SoC(t) = State of Charge of the battery at time *t*
SoC(0) = Initial State of Charge at time *t = 0*
Cn = Nominal capacity of the battery (in Ampere-hours, Ah)
I(τ) = Instantaneous current at time τ

- Positive I = charging
- Negative I = discharging

$\int_0^t I(\tau)d\tau$ = Total charge transferred into or out of the battery between time 0 and t
The factor 1/Cn converts accumulated charge into a percentage change in SoC. This plays a critical role in predictive cell balancing and thermal forecasting.

3. AI-Based Temperature Prediction using Random Forest Regression: Unlike sequential neural models, the deployed system uses a classical ensemble learning approach optimized for tabular sensor inputs. The prediction function can be mathematically generalized as:

$$T_{pred} = \frac{1}{50}\sum_{i=1}^{50} fi\,(Xscaled)$$

Where:
f_i represents the ith decision tree in the ensemble
N=50 is the number of trees used
X_{scaled} is the standardized multivariate feature vector:

$$X = \left[V,\ I,\ SoC,\ C,\ R_{int},\ cycle,\ ime_step\right]$$

Each tree predicts a temperature estimate and the final output is the average of all tree decisions. This approach enables reliable CPU-based inference without the need for GPU acceleration.

4. Safety Classification Layer using Threshold Rule: To convert regression output into actionable system alerts, a rule-based classifier is used in the deployed backend:

$$\text{Status} = \begin{cases} \text{WARNING}, & T_{\text{pred}} > 36^\circ C \\ \text{NORMAL}, & T_{\text{pred}} \leq 36^\circ C \end{cases}$$

This layer transforms predicted thermal values into safety states for real-time monitoring in the UI component and decision-making.

5. Standardization Preprocessing Model (Deployed Scaler Equation): The deployed feature normalization uses standard score transformation:

$$X_{scaled} = \frac{X - \mu}{\sigma}$$

Where:
μ is the mean of each feature (computed from training set)
σ is the standard deviation of each feature.
The scaler parameters are stored and reused during inference to ensure consistent model input distribution.

6. Mathematical Model for Cell Balancing: Voltage imbalance is computed as:

$$\Delta V = Vmax - Vmin$$

Balancing is initiated when:

$$\Delta V > \epsilon$$

Where
ϵ = threshold (typically 0.02–0.05 V).

The implemented results are as follows:

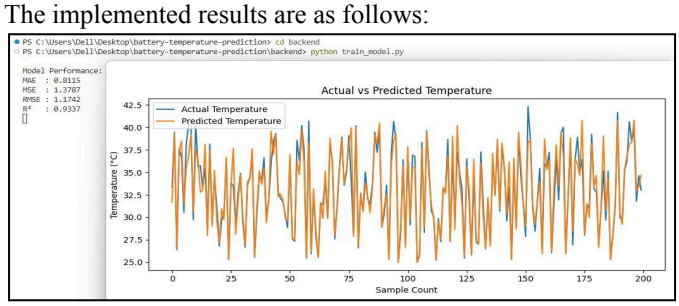

Fig. no. 2 Normal model showing actual vs predicted values of temperature with performance measures.

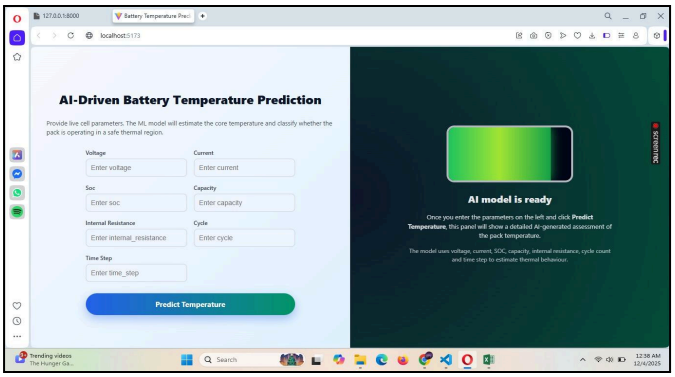


```
PS C:\Users\Dell\Desktop\battery-temperature-system\backend> python train_model.py
MAE: 0.8115396150327062
MSE: 1.3787133466527268
R² : 0.9337159471080733
Model + scaler + sample_predictions saved!
```

Fig. no. 3 Main UI (Landing Page).

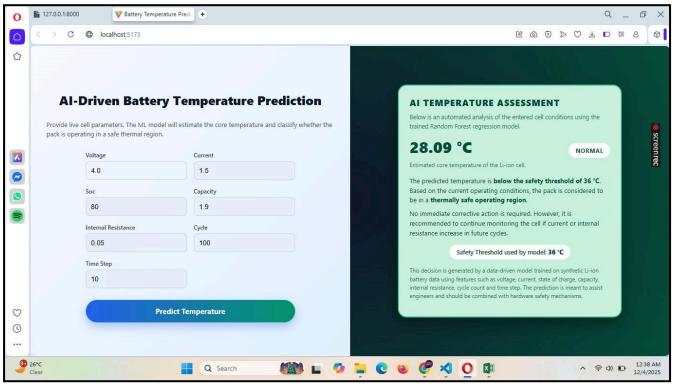

Fig. no. 4 Temperature Prediction based on input value of battery condition.

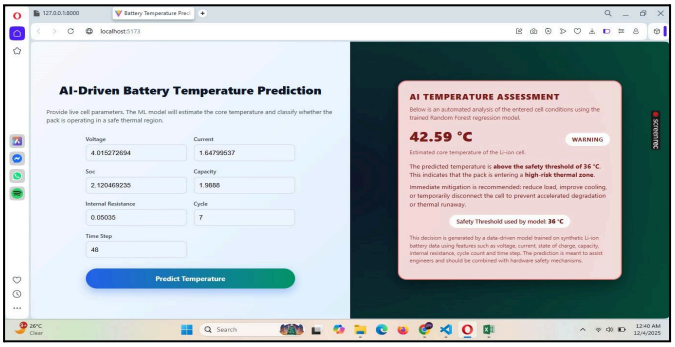

Fig. no. 5 Predicted Temperature More than safe threshold with immediate measures.

Fig. no. 6 Performance measures of the previous threshold based model.

V. Conclusion and Future work

This research emphasizes the importance of accurate temperature prediction in lithium-ion batteries for electric vehicles. The present system focuses on accurate core temperature prediction of lithium-ion battery cells using a CPU-efficient Random Forest ensemble model trained on 40,000 multivariate samples, standardized via a Gaussian-based feature scaler. The model demonstrated strong predictive alignment with physical thermal behavior approximated by heat-balance dynamics, achieving high reliability metrics (MAE ≈ 0.81 °C, RMSE ≈ 1.17 °C, $R^2 \approx 0.93$). The full-stack architecture integrating a Flask REST inference layer and a React dashboard confirms the system's readiness for real-time monitoring and safety classification. Advanced modules such as cell balancing strategies are retained as future work to support the next iteration of intelligent battery thermal-balancing frameworks.

References

[1] J. Bao, Y. Mao, Y. Zhang, H. Xu, Y. Jiang, and Y. Yang, "Critical Review of Temperature Prediction for Lithium-Ion Batteries in Electric Vehicles," *Batteries*, 2024.

[2] S. Surya, A. Samanta, V. Marcis, and S. Williamson, "Smart core and surface temperature estimation techniques for health-conscious lithium-ion battery management systems: A model-to-model comparison," *Energies*, 2022.

[3] Q. Wang, B. Jiang, B. Li, and Y. Yan, "A critical review of thermal management models and solutions of lithium-ion batteries for the development of pure electric vehicles," *Renew. Sustain. Energy Rev.*, 2016.

[4] R. Srinivasan et al., "Instantaneous measurement of the internal temperature in lithium-ion rechargeable cells," *Electrochimica Acta*, 2011.

[5] J. P. Schmidt et al., "Measurement of the internal cell temperature via impedance: Evaluation and application of a new method," *Journal of Power Sources*, 2013.

[6] D. Xiang et al., "Online monitoring of lithium-ion battery internal temperature using PWM switching oscillations," *IEEE Trans. Power Electron.*, 2022.

[7] A. A. Hussein and A. A. Fardoun, "Adaptive sensorless measurement technique for internal temperature of Li-ion batteries using impedance phase spectroscopy," *IEEE Trans. Ind. Appl.*, 2020.

[8] C. G. Moral et al., "Battery internal resistance estimation using a battery balancing system based on switched capacitors," *IEEE Trans. Ind. Appl.*, 2020.

[9] L. H. J. Raijmakers et al., "Non-zero intercept frequency: An accurate method to determine the integral temperature of Li-ion batteries," *IEEE Trans. Ind. Electron.*, 2016.

[10] Z. Wei et al., "Future smart battery and management: Advanced sensing from external to embedded multi-dimensional measurement," *J. Power Sources*, 2021.

[11] L. Raijmakers et al., "A review on various temperature-indication methods for Li-ion batteries," *Applied Energy*, 2019.

[12] S. Ma et al., "Temperature effect and thermal impact in lithium-ion batteries: A review," *Progress in Natural Science*, 2018.

[13] M. H. Al-Meer, "A Deep Learning Method for the Health State Prediction of Lithium-Ion Batteries Based on LUT-Memory and Quantization," *Energies*, 2023.

[14] A. Safari et al., "A State-of-the-Art Review on Battery Cell Balancing Strategies," *Discover Energy*, 2024.

[15] Y. A. Sultan et al., "Enhancing electric vehicle battery lifespan: integrating active balancing and machine learning for precise RUL estimation."

[16] Z. Chen et al., "Remaining Useful Life Prediction of Lithium-Ion Battery via a Sequence Decomposition and Deep Learning Integrated Approach," *IEEE*, 2023.

[17] K. Kaur et al., "Deep Learning Networks for Capacity Estimation and SOH Monitoring of Lithium-Ion Batteries for Electric Vehicles," 2023.

[18] M. Koseoglou et al., "Highly Effective Cell Equalization in a Lithium-Ion Battery Management System," *IEEE*, 2022.

[19] T. A. Stuart and W. Zhu, "Fast Equalization for Large Lithium-Ion Batteries," *IEEE*, 2019.

[20] Hemavathi S., "Overview of Cell Balancing Methods for Li-Ion Battery Technology," 2021.